UniFi 6 Lite

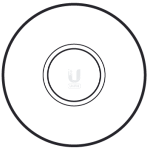

a

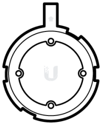

b

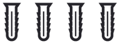

c

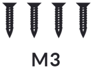

d

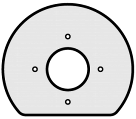

e

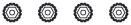

f

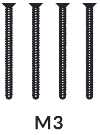

g

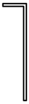

h

1

A

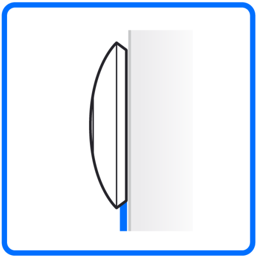

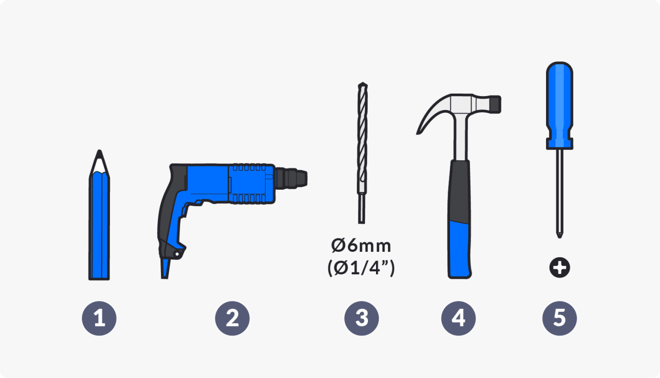
Ø6mm
(Ø1/4")
1
2
3
4
5

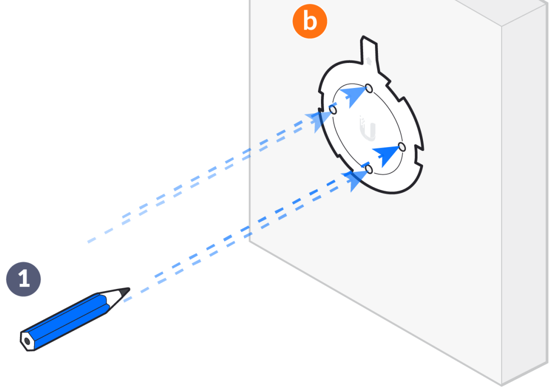

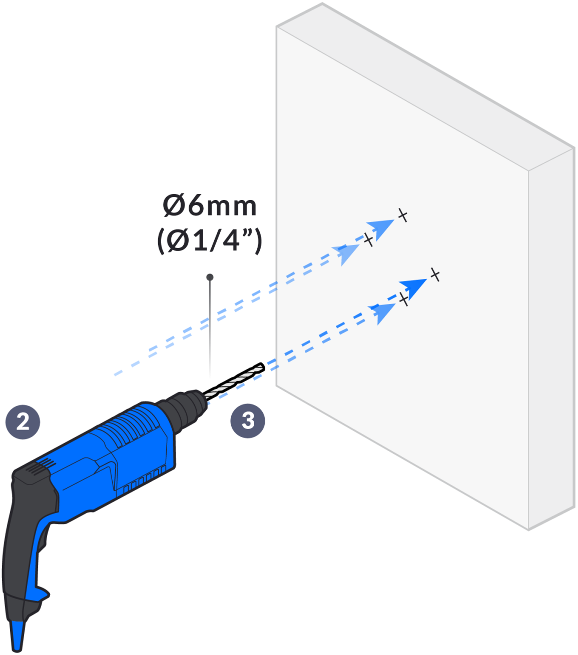

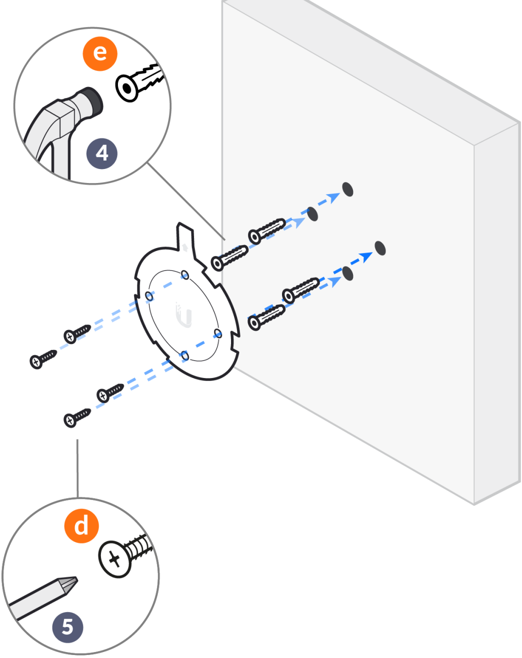

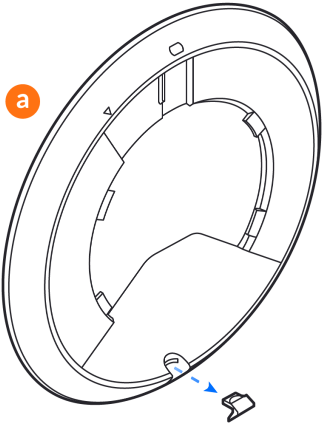

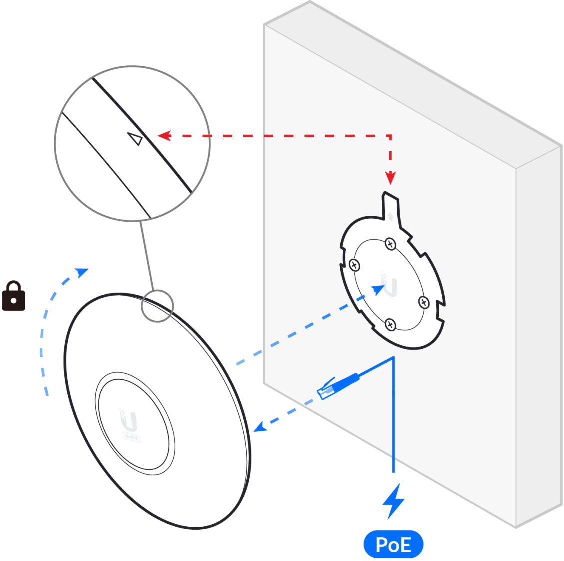

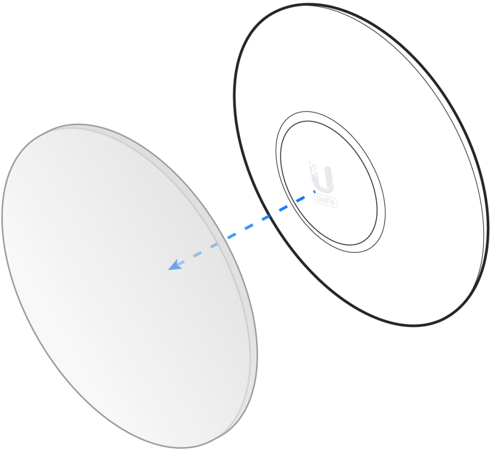

B

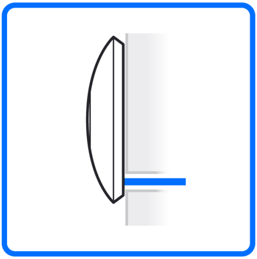

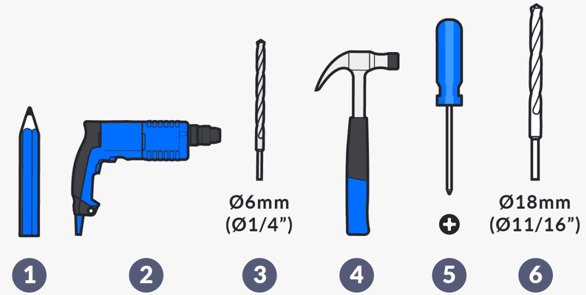
Ø6mm
(Ø1/4”)
⊕
Ø18mm
(Ø11/16”)
1
2
3
4
5
6

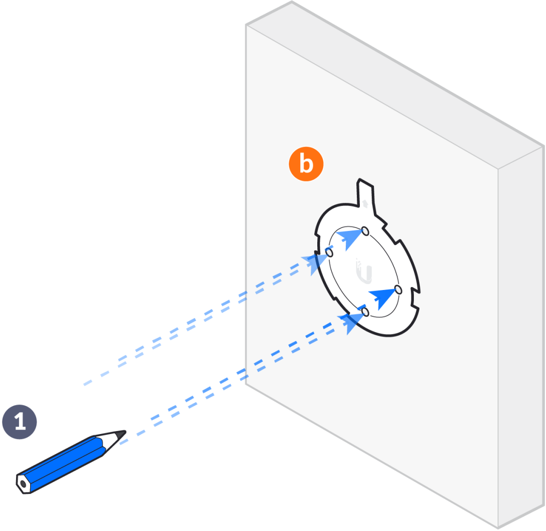

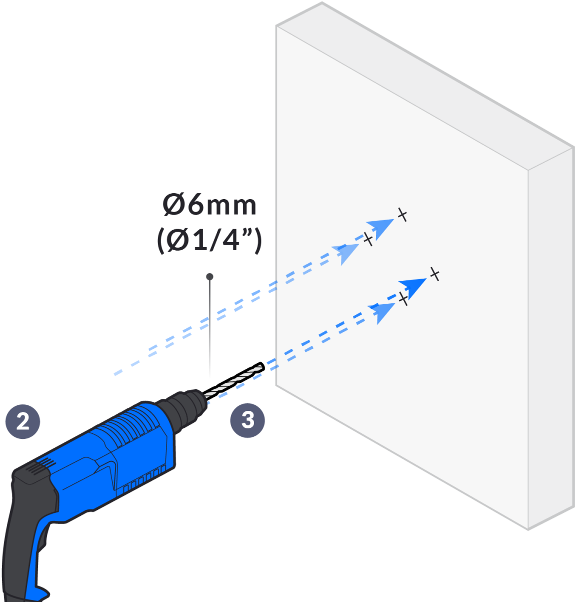

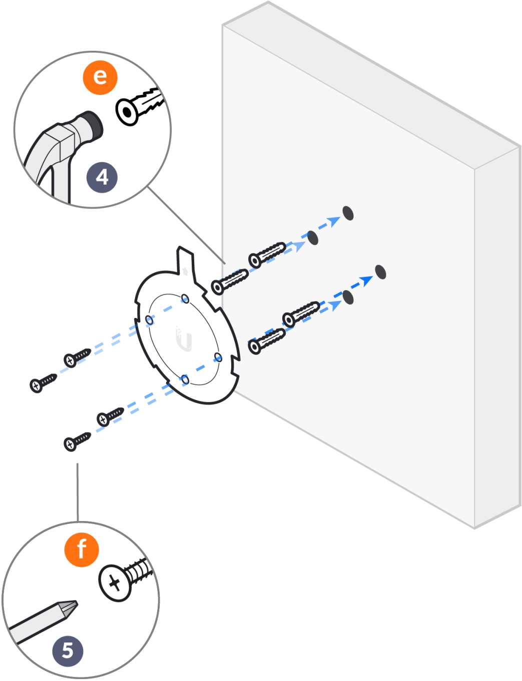

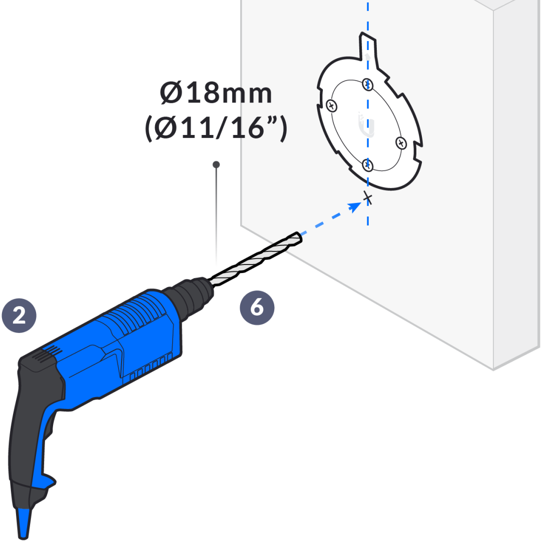
Ø18mm
(Ø11/16”)
2
6

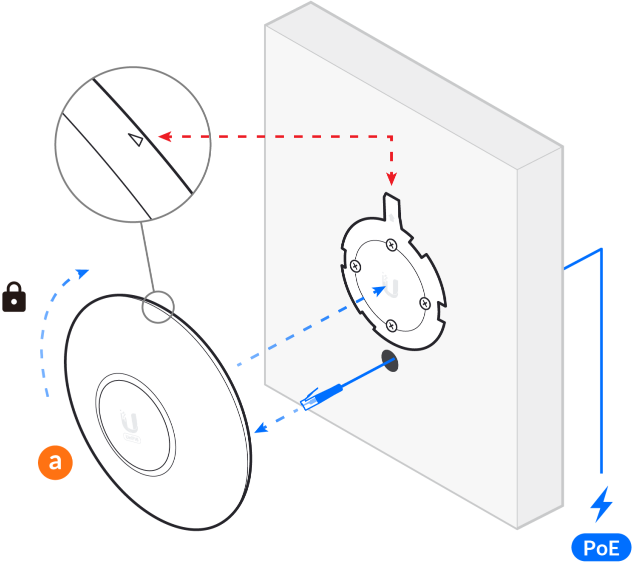

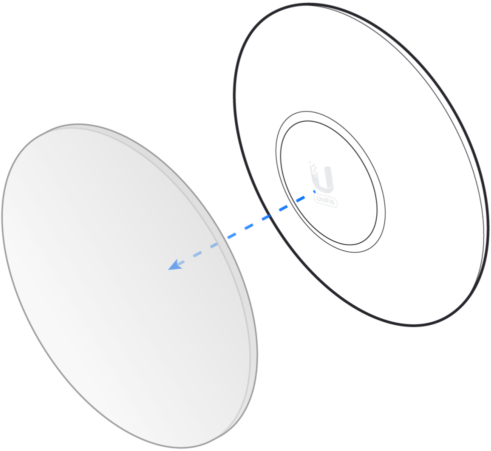

C

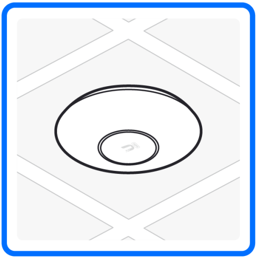

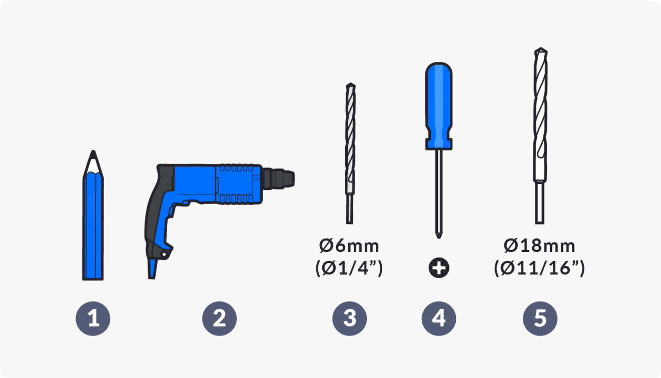
Ø6mm
(Ø1/4”)
Ø18mm
(Ø11/16”)
1
2
3
4
5

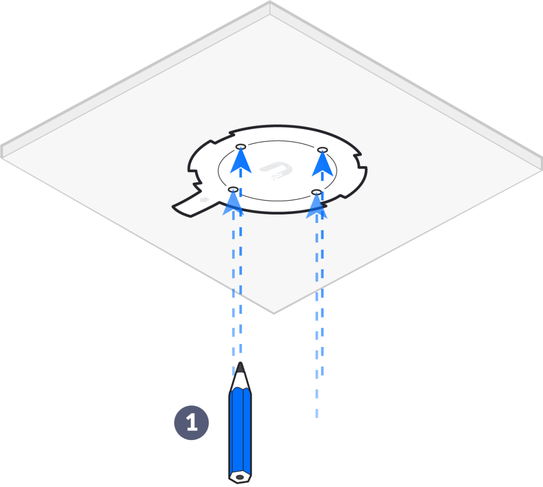

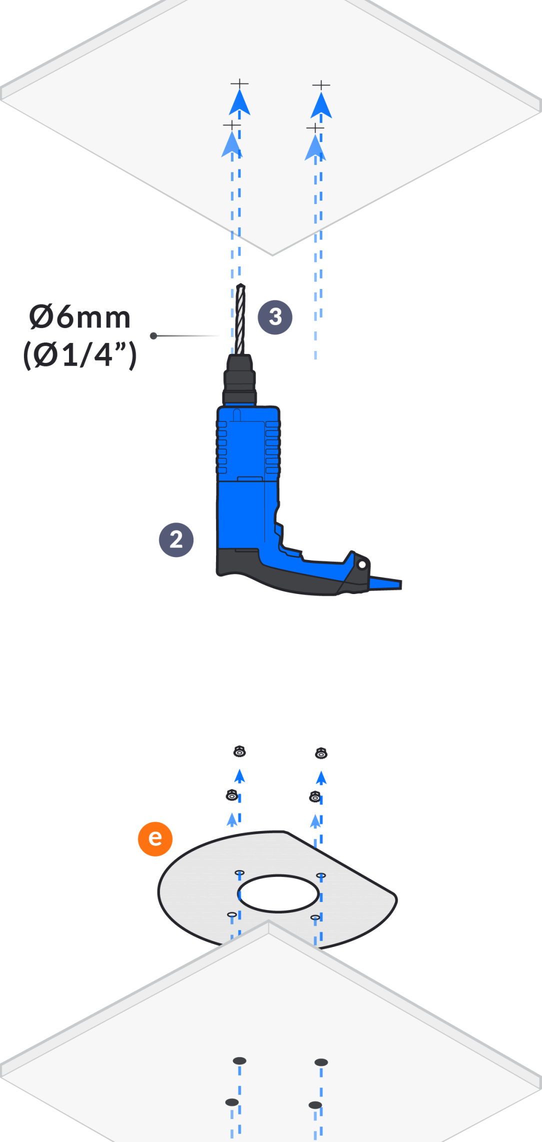
Ø6mm
(Ø1/4")
3
2
e

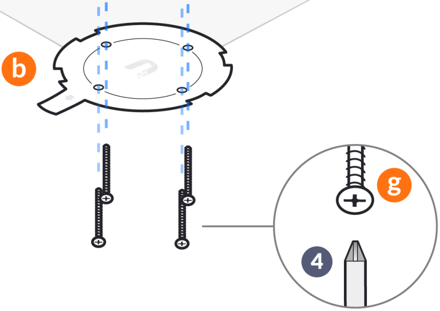

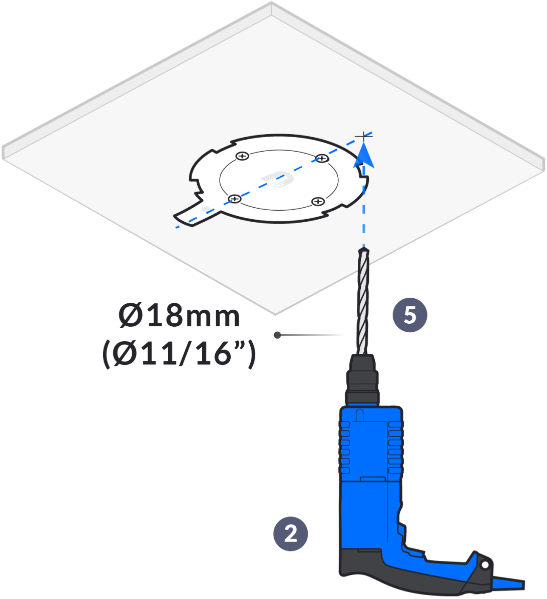
Ø18mm
(Ø11/16”)
5
2

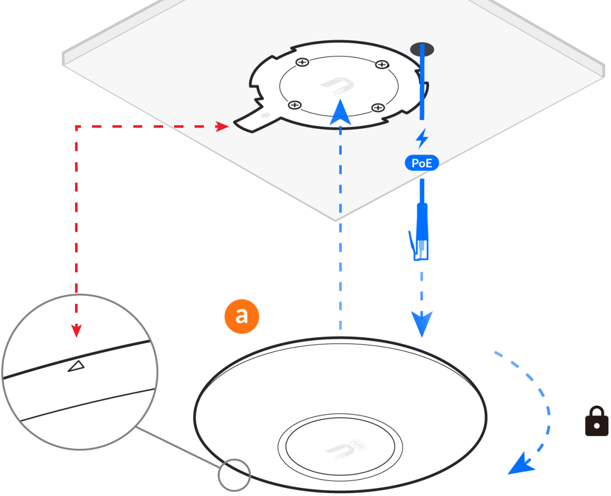

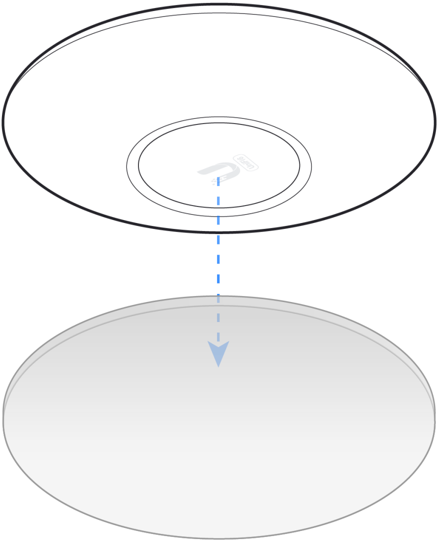

2

A

Internet

Gateway

B

Wi-Fi

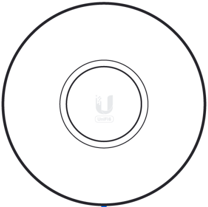

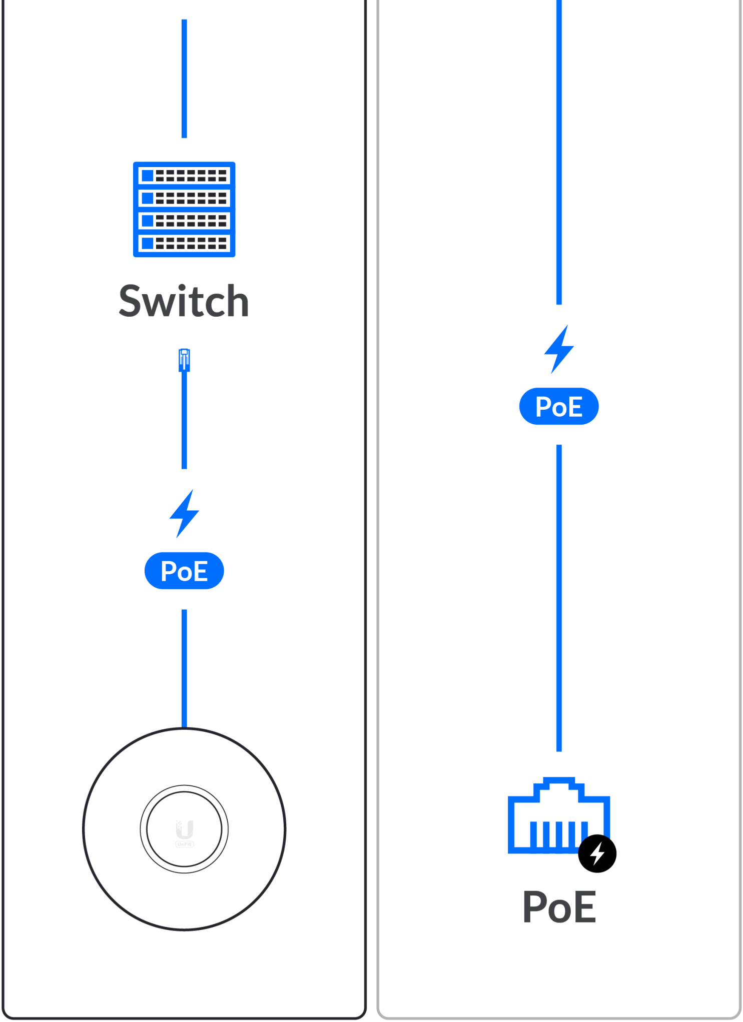
Switch
PoE
PoE
PoE

3

Download on the App Store

GET IT ON Google Play

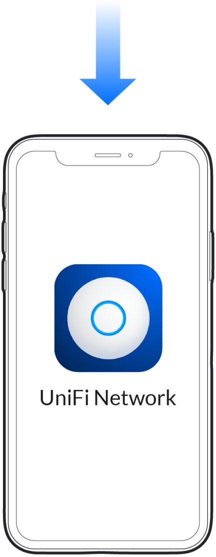
UniFi Network

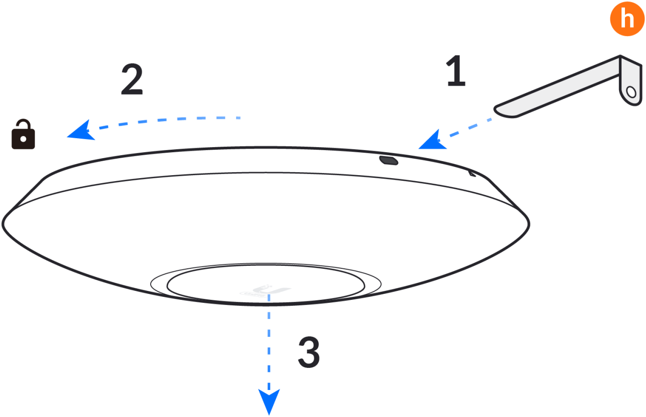

UniFi Network

🔗

Get Answers
help.ui.com

UI Support

🔗